INSTALLATION GUIDE

PART#4516
MOTOR MOUNT KIT *(With Rubber Pads)*

PART#4530
MOTOR MOUNT KIT *(With ALL Steel Pads)*

PART#4536
MOTOR MOUNT BRACKETS *(NO Pads)*

LS ENGINE INTO A 1982-2004 CHEVY S-10 OR GMC S-15 (2WD Only)

BEFORE YOU BEGIN:

a. Read instructions thoroughly before beginning this installation.

b. Before proceeding with this installation, you will need to source six (6) frame mount bolts, and locknuts (if vehicle does not have factory tapped frame mount bolt holes.

c. This motor mount kit (or bracket set) is for use during the installation of an LS-1, LS-6, or Vortec V8 into the vehicles listed above. The use of properly configured engine mounts is only one of many aspects of this engine swap. Modification to accomodate various components(i.e. firewall, transmission crossmember), or the use of special aftermarket products designed for this engine swap will be required. This instruction sheet addresses the safe, and proper installation of Trans-Dapt's motor mount kit only. For comprehensive, step-by-step directions, and useful tips for performing this complex project, we recommend the use of a V8 engine swap how-to guide.

THIS KIT INCLUDES:

QTY.	DESCRIPTION
1 pr	Engine Block Adapter Brackets
8 pcs	10mm-1.5 X 30mm Class 10.9 Hex Bolts
1 pr	Mount Pads *(4516 and 4530 Only)*
2 pcs	7/16" - 14 x 5" Gr. 8 Hex Bolts *(4516 and 4530 Only)*

QTY.	DESCRIPTION
2 pcs	7/16" Flat Washers *(4516 and 4530 Only)*
2 pcs	7/16" Lock Washers *(4516 and 4530 Only)*
2 pcs	7/16" - 14 Lock Nuts *(4516 and 4530 Only)*

#4516 & 4530 (complete mount kits)

1. Bolt the new frame mount pads *(included in this kit)* to the stock location on both sides of the vehicle frame, using three (3) bolts and locknuts *(not included)*. If frame mount holes are threaded from the factory, you will not need locknuts. Do *not* install the engine brackets directly to the engine at this time.

   1985-1993 Models

   1985-93 model framerails have tapped holes, which make bolting the pads to the chassis easy. For vehicles without tapped holes, either disassemble the "A" arm assembly, or cut a small access hole on the backside of the crossmember. This will provide clearance for both a wrench and a nut.

2. Connect the driver and passenger side engine block mounting brackets to the rubber or all steel frame pads *(included)* using a 7/16"-14 X 5" hex head bolts, washers and lock nuts *(included)*. See *"figure A"* for the correct orientation of the engine block mounting brackets.

3. With the engine mount brackets and rubber frame mounts now connected, carefully lower the engine into positioned in the engine bay, and loosely bolt the engine bracket/rubber pad assembly to the engine block.

4. When the engine is level and at the proper angle, tighten the engine brackets, frame mount pads and 5" connecting bolts to the correct torque spec.

#4536 (engine brackets only)

These Trans-Dapt Performance engine mount brackets install using a pair of stock 2.8 liter V6 engine rubber mount pads (not included).

To install, follow steps 1 through 4 on this page as shown for kits #4516 and 4530, substituting your stock 2.8L V6 mount pads for the frame mount pads included in complete kits #4516 and 4530. It may be necessary to grind the small metal tabs on either side of the stock mount pads to fit the Trans-Dapt performance mount brackets.

IMPORTANT NOTE REGARDING 2.2L 4 CYLINDER MODELS

If you are using kit 4536 to install the engine into a 2.2L 4 cylinder chassis, you will need to purchase a pair of Trans-Dapt #4217 rubber mount pads, or exchange this kit for a 4516 or 4530 complete kit that includes frame mounts.

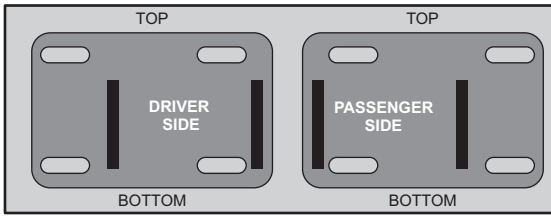

Figure A: This diagram demonstrates the orientation of the mounting brackets on the car.

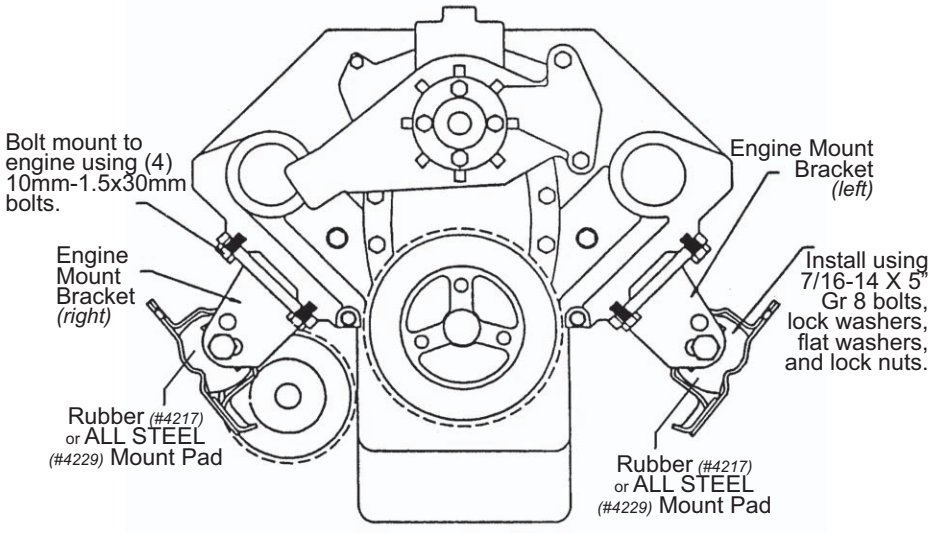

IMPORTANT

This product has been designed for a specific application combination. Modifications to any of the components will void the product warranty and return privileges. If you have questions regarding the installation of this product, it is strongly recommended that you contact the Trans-Dapt tech support team at: **techsupport@hedman.com**

TRANS-DAPT PERFORMANCE
12438 Putnam Street, Whittier, CA 90602
tel (562) 921-0404 fax (562) 921-7515
website: www.hedman.com
email: techsupport@hedman.com